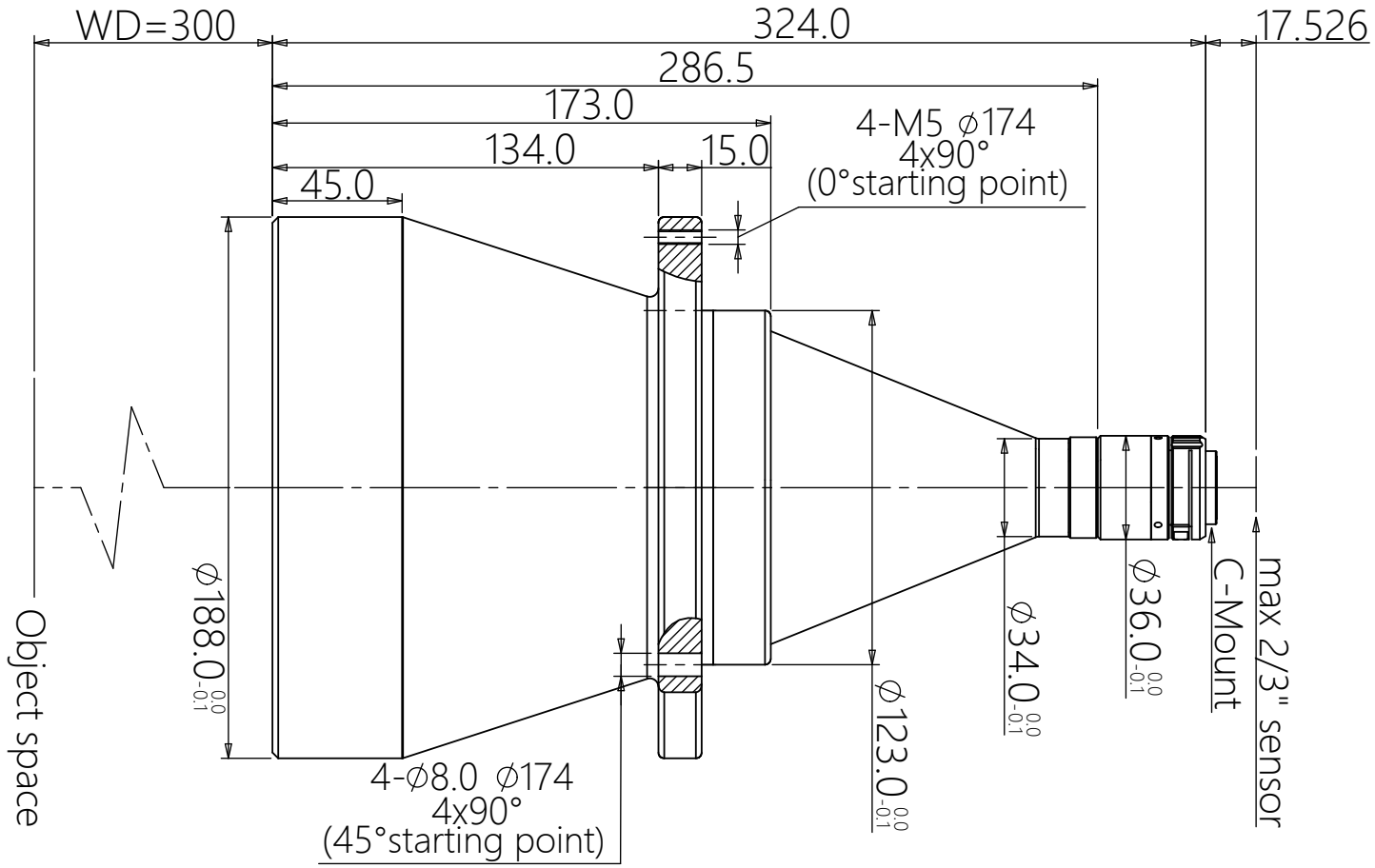
WD=300
324.0
17.526
286.5
173.0
134.0
15.0
45.0
4-M5 ⌀174
4x90°
(0°starting point)
Object space
⌀188.0 0.0 -0.1
4-⌀8.0 ⌀174
4x90°
(45°starting point)
⌀123.0 0.0 -0.1
⌀34.0 0.0 -0.1
⌀36.0 0.0 -0.1
C-Mount
max 2/3" sensor